Royal McBee Service Bulletin...

July 19, 1963
Service Bulletin No. T-65 & D-80

ROYFAX 100 AND CUSTOM PHOTOCOPIERS

MOTOR REDUCTION GEAR KIT
(Part Number 3-103K)

The two Motor Reduction Gears and Reduction Gear Assembled with Shaft are available as replacement parts for the Royfax 100 and Custom Photocopiers Motor.

The Motor Gears will require replacement when it is noted that the Motor Shaft does not turn or hesitates momentarily while turning. The Gears are obtained in Kit form through the normal part ordering procedure using the above number.

Use the following procedure to install the Gears and Shaft:

Remove the Motor from the unit as described in the Royfax 100 and Custom Service Manual, Revised June 1963, Page 17.

Remove Screws (10) and Bracket (8). Pull Cover Plate (9) off the Motor. Remove the old Gears and Shaft Assembly. Install Gear (6) on Shaft (3) first. Next, install Gear (5) and Washer (4) on Shaft (2). Install Washers (1) on Gear and Shaft (7) and install the assembled parts in the Motor Assembly. Lubricate the Gears and Shafts with BFL-2 Grease.

Insert Cover Plate (9) over Shaft (7) and secure the Cover Plate and Bracket (8) to the Motor Assembly with Screws (10). Install the Motor as described in the Royfax 100 and Custom Service Manual Revised June 1963, Page 17.

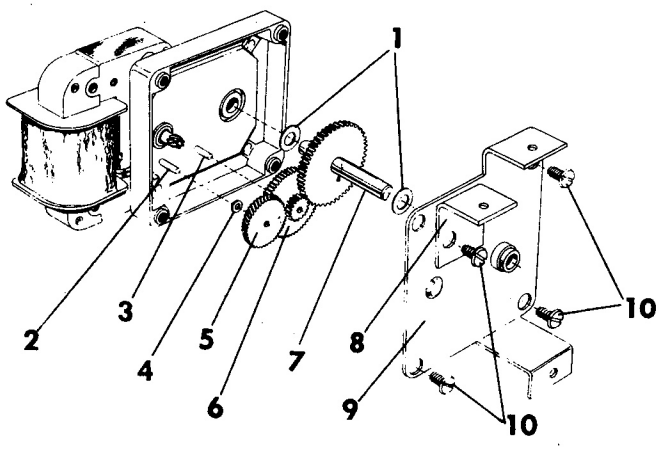

CUSTOMER SERVICE PLANNING -

Per/PSC-FGL

TECHNICAL SERVICE PUBLICATIONS DEPARTMENT

Dist.: 5X,Y (Divisional Service Managers) 6X,Y (District Service Managers) 7, 8